EUROPEAN ANTENNAS

Excellence through design
Creative in concept

DUAL POLAR LOW PROFILE ANTENNA

MODEL: LPA7-1475RL/1254

FREQUENCY:	1.452 - 1.492 GHz	**GAIN:**	8.5 dBiC
POLARISATION:	R+LHC	**3 dB HPBW:**	70° - 128°
AXIAL RATIO:	1.5 dB	**10 dB HPBW:**	60° - 112°
POWER RATING:	20 W	**VSWR:**	<1.5:1
TEMPERATURE:	–40° to +60°C		
FINISH:	As Built (No Paint)	**MASS:**	1.0 Kg / 2.2 lbs Approx.

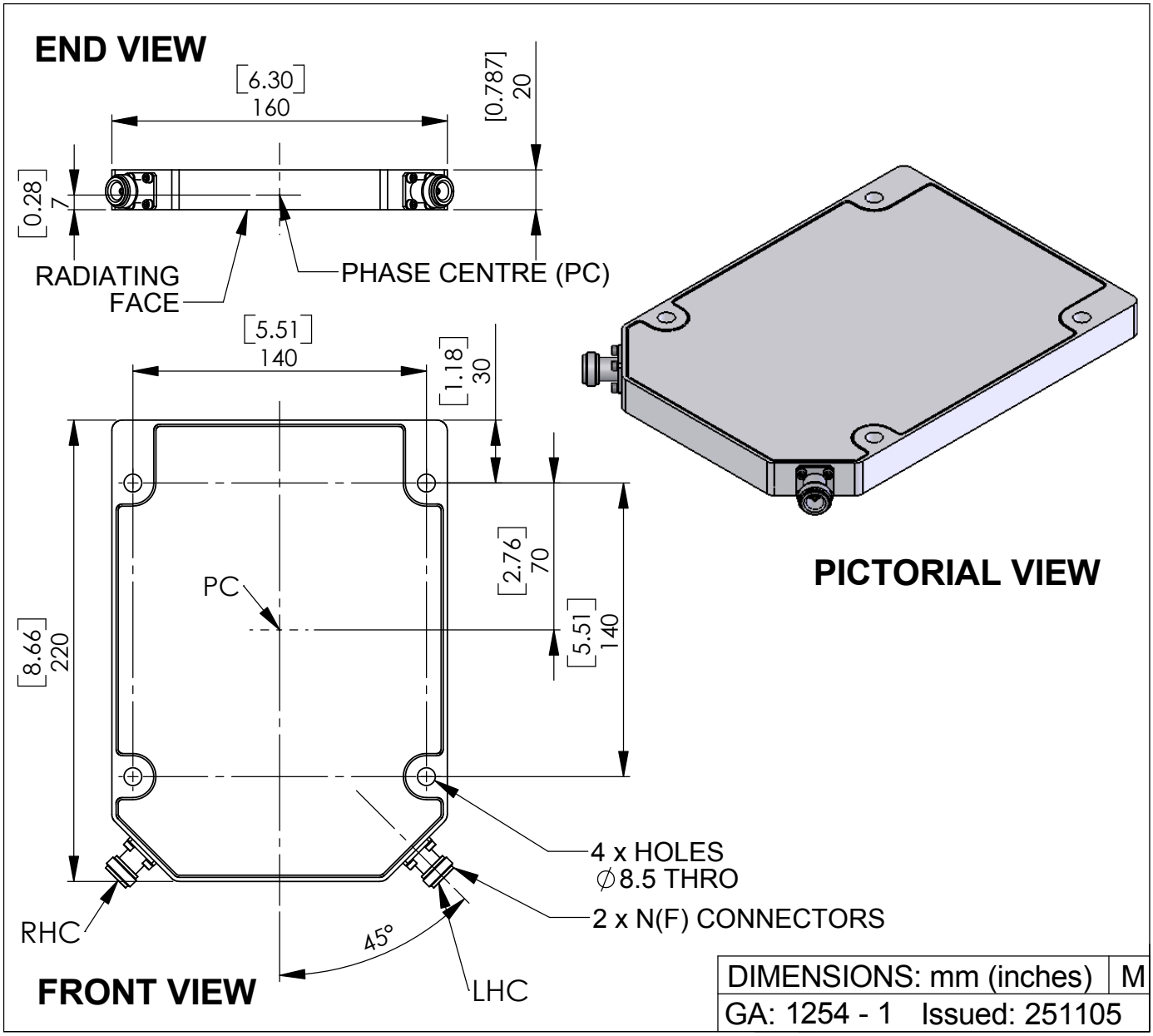

DIMENSIONS: mm (inches)	M
GA: 1254 - 1 Issued: 251105	

EUROPEAN ANTENNAS LTD.

Tel: +44 (0)1638 731888
Fax: +44 (0)1638 731999

LAMBDA HOUSE, CHEVELEY
NEWMARKET, SUFFOLK, CB8 9RG,
UNITED KINGDOM

E-Mail: sales@european-antennas.co.uk
Website: www.european-antennas.co.uk

European Antennas Ltd. has a policy of continuous developement and therefore stress that the data contained on this sheet should be used for guidance only.